Raised Panel Kitchen Door

Lipped door fits inside of cabinet frame

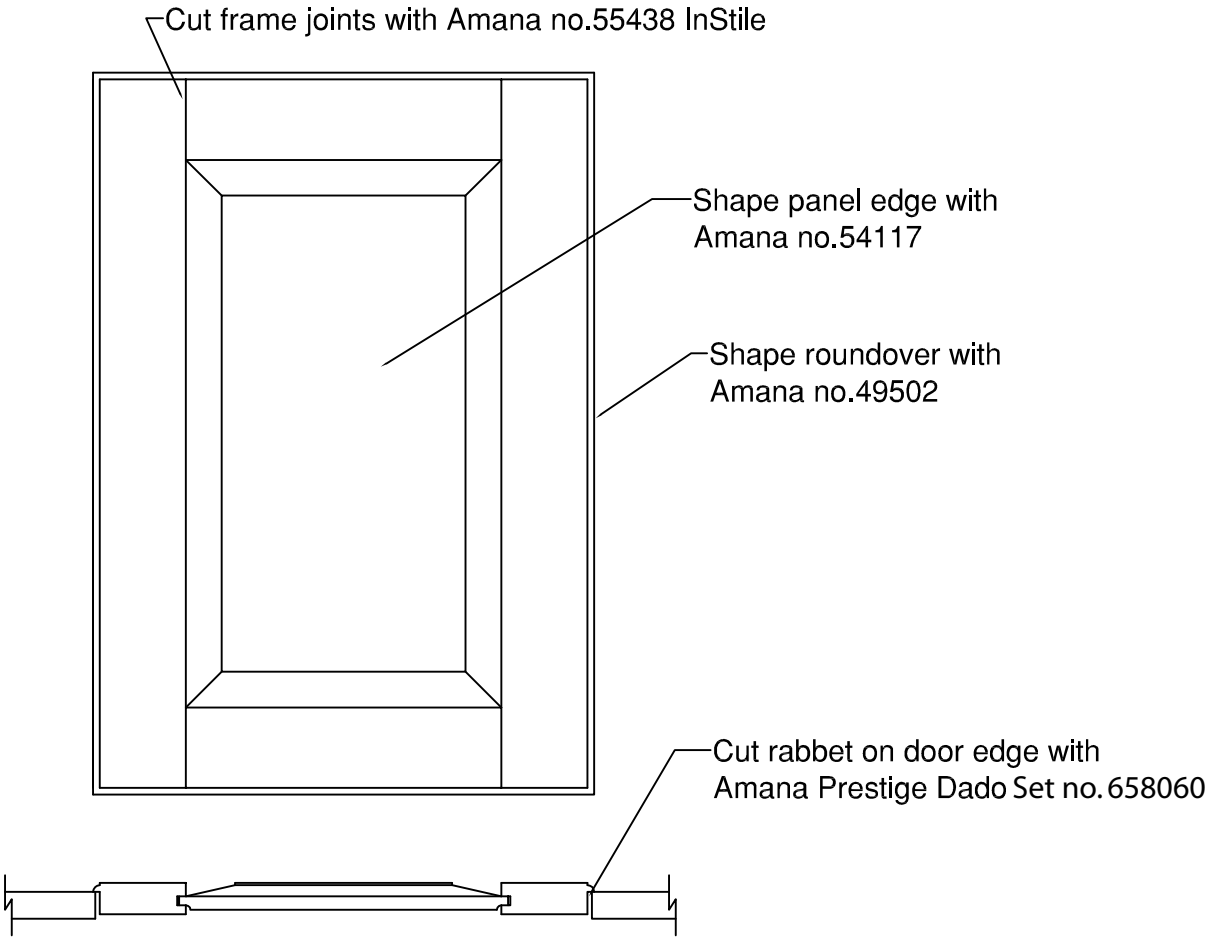

© Copyright 2011 Amana Tool® . All rights reserved