SURFACING JIG

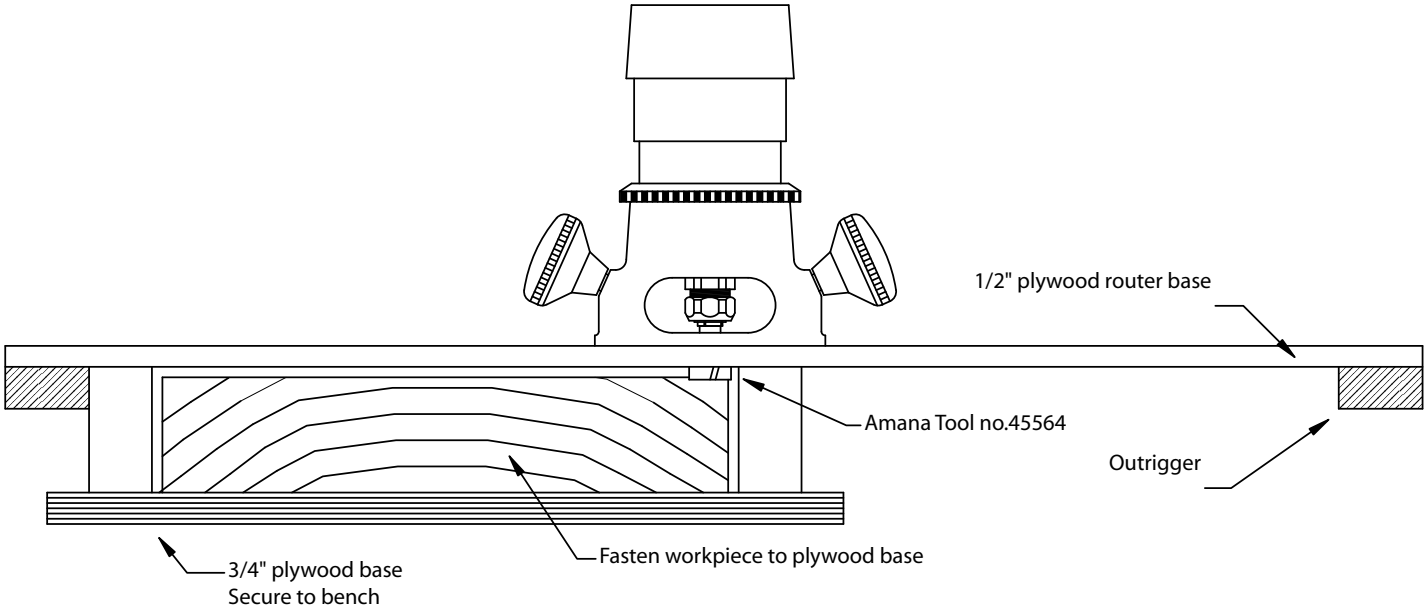

REDEFINING WOODWORKING™

© Copyright 2007 Amana Tool® . All rights reserved